Your Expert Partner for **Human Machine Interfaces**

Actuator

45-
2819.1C90.003

https://www.eao.com/component/45-2819.1C90.00...

Your product:

45-2819.1C90.003
Actuator

FRONT

Front dimension:	Ø 29,5 mm
Front form:	Round
Front bezel colour:	Black
Front bezel material:	Plastic

MOUNTING

Design:	Raised
Mounting cut-out:	Ø 22.3 mm
Mounting type:	Panel mounting

OPERATING-/INDICATION PART

Lever colour:	White
Lever material:	plastic
Lever shape:	short

MECHANICAL CHARACTERISTICS

Switching action:	Maintained - Rest - Maintained
Switching positions:	3 positions
Switching angle:	45° left / 45° right / -45° ... +45°
Mechanical lifetime:	1 Mil. cycles of operation
Operating frequency:	1 800/h
Weight:	0.022 kg

AMBIENT CONDITION

IP front protection:	IP66, IP67, IP69K
Operating temperature:	– 25 °C ... + 70 °C
Storage temperature:	– 40 °C ... + 80 °C
Shock resistance:	According to IEC 60068-2-27: Sinusoidal half-wave 50 g / 11 ms
Vibration resistance:	According to IEC 60068-2-6: 10 ... 500 Hz: 5 g
Climate resistance:	During operation according to IEC 60721: 3K6, 3C3, 3S2, 3M6

CERTIFICATE

REACH:	REACH compliant
RoHS:	RoHS compliant

OTHER

Short Description:	Actuator, Ø 22.3 mm, Ø 29,5 mm, optional illuminative, White, short, Round, Black, Plastic, Maintained - Rest - Maintained, IP66, IP67, IP69K
Housing material:	Plastic
Hints:	External diameter of the short lever 32.3 mm

Switching positions:

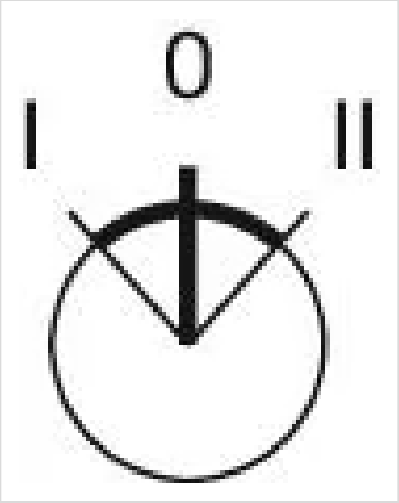

Wiring diagrams:

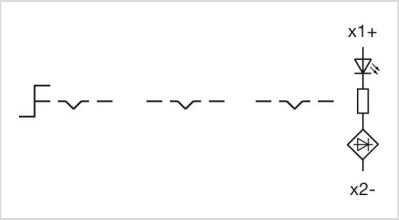

Mounting cut-outs:

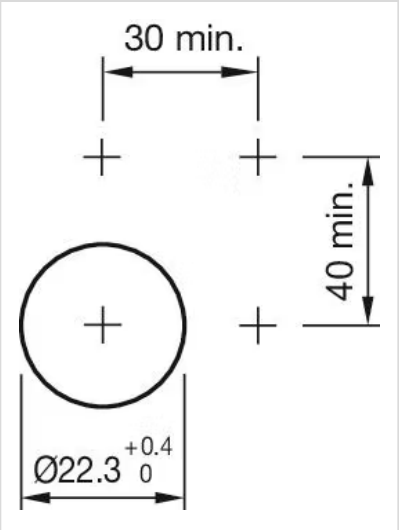
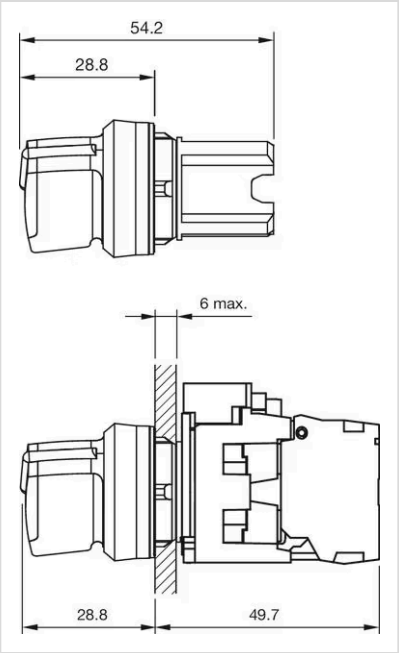
Dimension drawings: