Your Expert Partner for **Human Machine Interfaces**

Actuator

61-
6451.4277

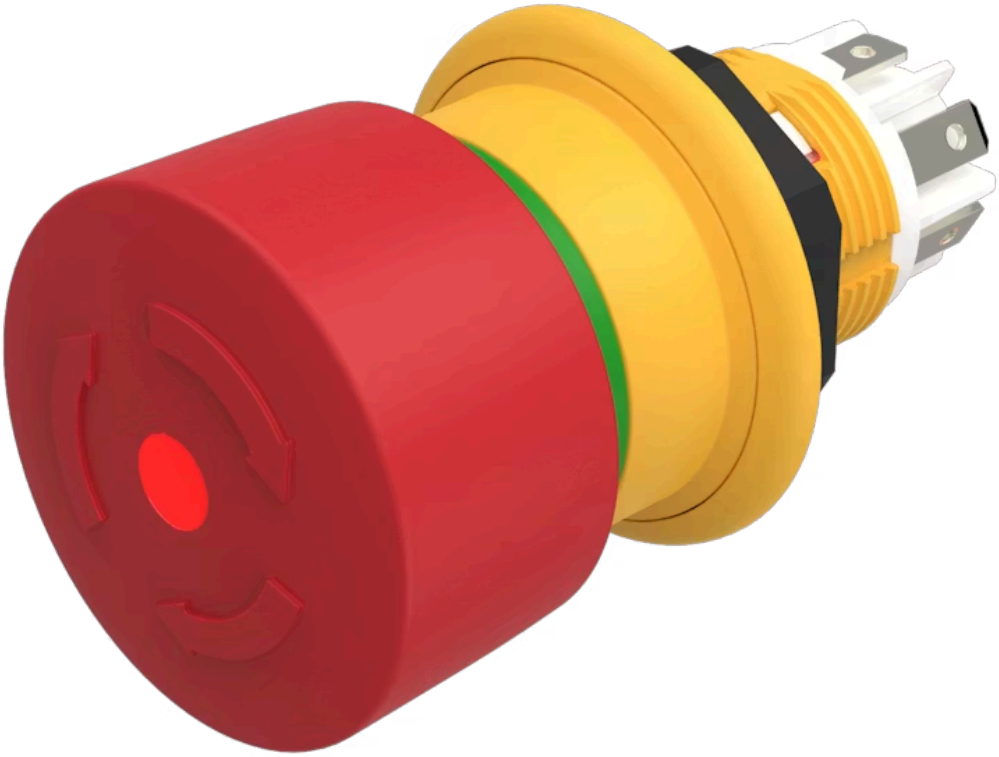

https://www.eao.com/component/61-6451.4277/en...

Your product:

61-6451.4277
Actuator

FRONT

Front dimension:	Ø 27 mm
Front form:	Round

MOUNTING

Mounting type:	Panel mounting

OPERATING-/INDICATION PART

Lens colour:	Red
Lens material:	Plastic
Lens illumination:	Illuminated
Lens shape:	Mushroom-head
Illumination colour:	Red

ELECTRICAL CHARACTERISTICS

Switching voltage and switching current:	Alternating current usage category AC-15 according to EN IEC 60947-5-1 Voltage 50 VAC Current 0,2 A DC usage category DC-13 according to EN IEC 60947-5-1 Voltage 50 VDC Current 0,2 A
Contacts:	1 NC / 1 NO
Contact resistance:	At 20 mV, 100 mA (IEC 60512-2-1) Insulation resistance 2 MΩ between the open contacts 7 MΩ towards the panel (DIN IEC 60512-3-1)
Operating voltage:	6 - 32 V DC

Rated Operational Voltage Ue:	50 VAC / DC, according to EN / IEC 60947-5-1
Rated impulse withstand voltage Uimp:	0.5 kV, according to EN / IEC 60947-1
Rated insulation voltage Ui:	250 VAC/DC according to EN IEC 60947-1
Rated short-circuit current caused:	1 000 A, type of short-circuit device 2 A gG (EN 60947-5-1)
Recommended minimum operational data:	Voltage 1 VAC/DC Current 1 mA
Switching rating:	50 V AC/DC @ 0,2 A
Electrical lifetime:	≥20 000 cycles of operation
Electric strength:	500 VAC, 50 Hz, 1 minute according to DIN IEC 60512-2
Overvoltage category:	II, according to EN / IEC 61058-1
Pollution degree:	3, according to EN IEC 60947-1
Standards:	According to EN 60947-5-1, EN 60947-5-5, DIN EN ISO 13850, EN IEC 60204
Thermal current Ith:	0.5 A (EN IEC 60947-5-1 / max. current in continuous operation at max. + 55 degrees C)

MECHANICAL CHARACTERISTICS

Terminal:	Plug-in terminal, 2.8 x 0.5 mm
Switching action:	Maintained
Release type:	Twist to unlock
Mechanical lifetime:	≥20 000 cycles of operation
Operating force:	30 N ±4 N
Operating Travel:	4.2 mm
Tightening torque:	Max. 0.8 Nm
Weight:	0.018 kg

AMBIENT CONDITION

IP Protection:	IP67 front side, according to EN IEC 60529/A1:2010-04, IP69K front side, according to EN IEC 60529/A1:2010-04, Panel surface roughness Ra1.6
IK Protection:	IK06
Operating temperature:	– 25 °C … + 55 °C
Storage temperature:	– 40 °C … + 85 °C
Shock resistance:	Max. 150 m / s^2, pulse width 11 ms, 3-axis, (semi-sinusoidal as per EN IEC 60068-2-27)

Vibration resistance: Max. 100 m / s^2 from 10 Hz ... 500 Hz, 20 cycles, 3-axis (sinusoidal EN IEC 60068-2-6)

Climate resistance: Damp heat, steady: 56 days, + 40 °C/93 % relative humidity, according to EN IEC 60068-2-78
Dry heat: 96 hours, + 65 °C, as per EN IEC 60068-2-2
Low temperature: 96 hours, – 25 °C (as per EN IEC 60068-2-1)) UV test, 56 days (EN 60068-2-5:1999)

CERTIFICATE

Approbations: CB (EN 60947), UL NISD (cULus, UL EU) LISTED E-File-Nr.: E341760

Conformities: CE, UKCA

REACH: REACH compliant

RoHS: RoHS compliant

OTHER

Short Description: Actuator, Ø 27 mm, Mushroom-head, Illuminated, Red, Plastic, Round, 1 NC / 1 NO, Maintained, Plug-in terminal, 2.8 x 0.5 mm, Twist to unlock, Red

Kind of illlumination: LED with polarity reversal protection

Dimension: Ø 27 mm

Hints: Application as per DIN EN ISO 13850 and EN 60204-1
Seal Part No. 61-9900
Anti-twist ring No. 51-910
Fixing nut No. 51-991
Plug-in terminals 2.8 mm x 0.5 mm are solderable without UL certificate
Front plate thickness 1 ... 4 mm with an anti-rotaition ring
Front plate thickness 1 ... 6 mm without an anti-rotaition ring

Wiring diagrams:

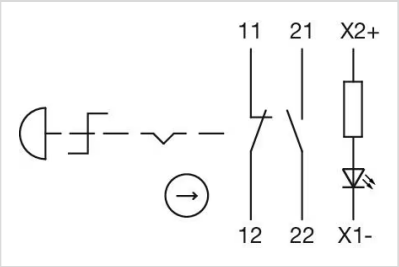

Component layouts:

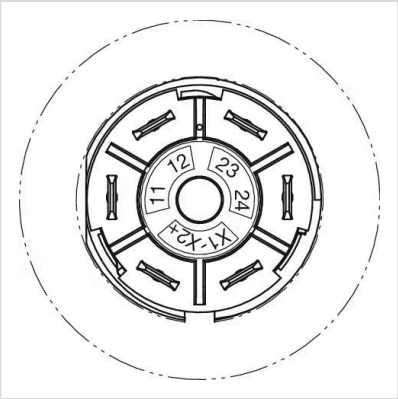

Mounting cut-outs:

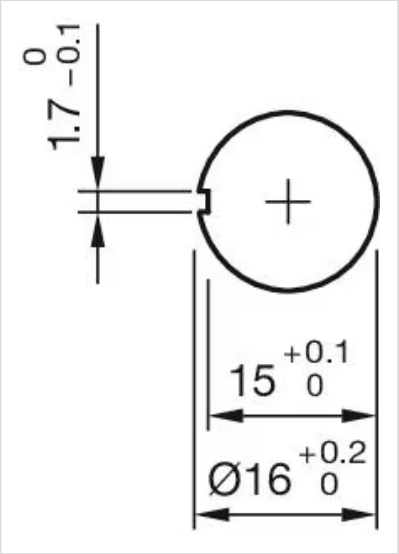
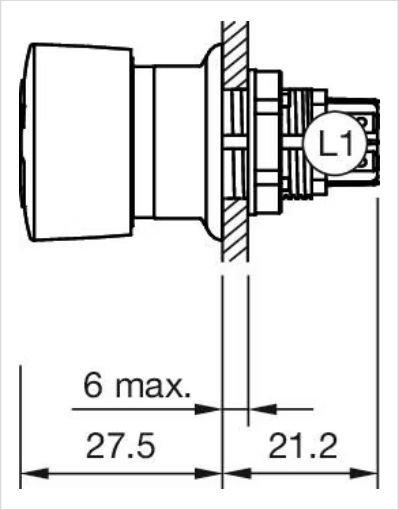
Dimension drawings: