APPROVED: _____

DATE: _____ TITLE: _____

Rev	AWO #	Description	Date	Appr
-		RELEASED	5/2/05	
A		REDRAWN	12/05/11	
B		UPDATED DRAWING	3/25/15	HR/YC
C		UPDATED SPEC.	8/3/16	AY/NP

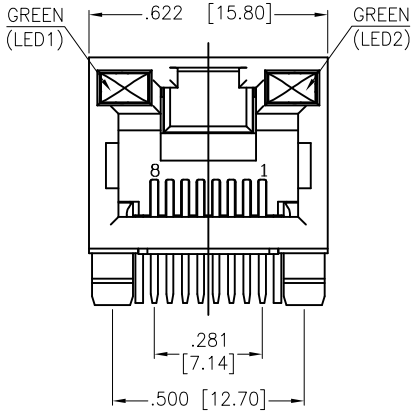

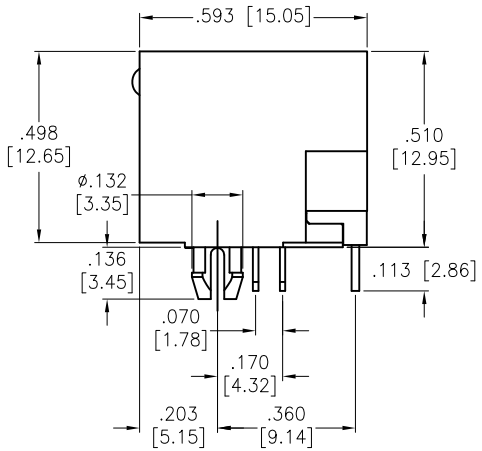

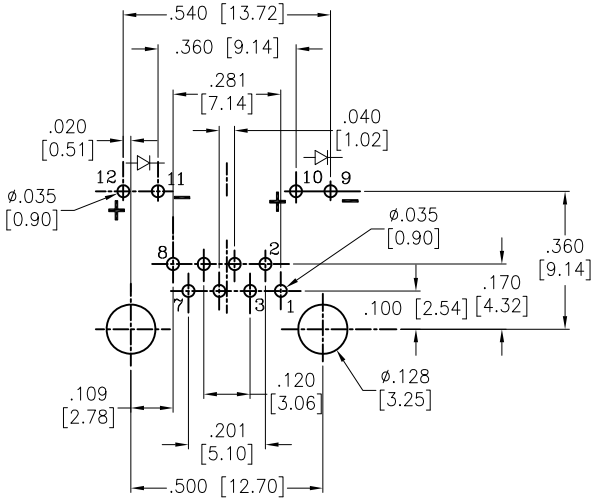

RECOMMENDED PCB LAYOUT

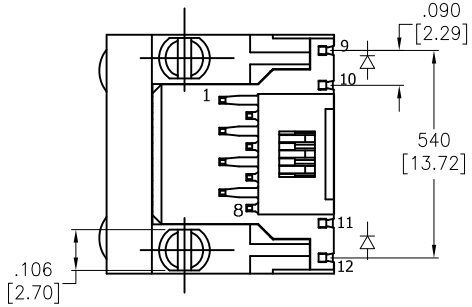

SPECIFICATIONS:
Material:
Insulator: PBT, glass reinforced, rated UL 94V–0
Insulator color: Black
Contacts: Phosphor Bronze
Cantacts Plating:
Round contact
Gold over Nickel underplate overall
Flat contact
Gold over Nickel underplate on contact area,
Tin over Nickel underplate on solder tails
(See chart for thickness)
Electrical:
Voltage rating: 150 VAC rms
Current rating: 1.5 Amp
Contact Resistance: 20 mohms max
Insulation resistance: 1000 Mohms min @ 500 VDC
Dielectric withstanding voltage:
1,000 VAC RMS (Contact to Contact) @0.5mA, 50Hz/60Hz for 1 minute.
1,500 V AC/DC Max. (Contact to Screen and Test panel) @0.5mA, 50Hz/60Hz for 1 minute
Temperature Rating:
Operating temperature: –40°C to +85°C
Environmental:
Lead free, RoHS compliant.

RoHS COMPLIANT

X	PLATING
0	15 µin Gold
1	30 µin Gold
2	50 µin Gold

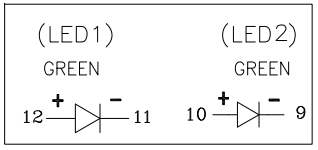

UNLESS OTHERWISE SPECIFIED
ALL DIMENSIONS ARE INCHES [MM]
TOLERANCES: EXCEPT AS NOTED

INCHES		HOLES	
.X	± .10	Ø.X	±.10
.XX	± .020	Ø.XX	±.015
.XXX	± .015	Ø.XXX	±.010

APPROVALS		DATE
DRAWN	SS	5/2/05
CHECKED		
APPROVED		

ADAM TECH
909 Rahway Avenue, Union, NJ 07083
Phone: 908-687-5000 Fax: 908-687-5710

TITLE: MODULAR TELEPHONE JACK, 8P8C RIGHT ANGLE, WITH GREEN LED'S

SIZE	PART NO.	REV.
X	MTJ-88ARX1-LD	C

REF: S00005C | SCALE: NTS | SHEET 1 OF 1