Your Expert Partner for **Human Machine Interfaces**

Push button, Ø 22 mm, stainless steel 316L, cable 200 mm, 180°

82-6655.2000

https://www.eao.com/component/82-6655.2000/en...

Your product:

82-6655.2000
Push button, Ø 22 mm, stainless steel 316L, cable 200 mm, 180°

FRONT

Front dimension:	Ø 25 mm
Front form:	Round
Front bezel material:	Stainless steel 316L
Front bezel shape:	Flush

MOUNTING

Mounting cut-out:	Ø 22 mm
Mounting type:	Panel mounting

OPERATING-/INDICATION PART

Lens colour:	Silver
Lens material:	Stainless steel 316L
Lens illumination:	Non illuminated
Lens shape:	Flush
Lens optics:	opaque

ELECTRICAL CHARACTERISTICS

Switching voltage and switching current:

according to UL 508 (Silver contacts)
cosφ 0,75 … 0,8

Voltage	Current
120 VAC	5 A
240 VAC	3 A
24 VAC	1 A

according to IEC 60947-5-1 (Silver contacts)
Service categorie AC-15

Voltage	Current
24 VAC	1 A
35 VAC	1 A (M12 version)
110 VAC	1 A
220 VAC	0.5 A

Switch rating DC service categorie DC-13 (Silver contacts)

Voltage	Current
24 VDC	0.7 A
35 VDC	0.5 A (M12 version)
110 VDC	0.2 A
220 VDC	0.1 A

Rated Operational Voltage Ue: 250 VAC

Rated insulation voltage Ui: 250 V

Short circuit protective device: fuse / 500 V / 5 A / gG

Rated short-circuit current caused: AC: 1 kA
DC: 1 kA

Switching rating: 35 V AC/DC @ 0,6 A

Electrical lifetime: 50 000 cycles of operation

Electric strength: 1500 VAC, 50 Hz 1 minute between life terminals and ground

Pollution degree: 2, according to EN IEC 60947-1

Thermal current Ith: 5 A

MECHANICAL CHARACTERISTICS

Terminal: Cable 200 mm, 180°

Switching action: Maintained

Switching system: Snap-action switching element

Mechanical lifetime: 500 000 cycles of operation

Operating force: 4 N … 7 N

Operating Travel: ca. 3 mm

Tightening torque: 0.5 … 0.6 Nm

Weight: 0.04 kg

AMBIENT CONDITION

IP front protection: IP65, IP67

Operating temperature: – 30 °C … + 70 °C

Storage temperature: – 40 °C … + 80 °C

Shock resistance: Max. 500 m / s^2 as per IEC 60068-2-27

Vibration resistance:

10 … 500 Hz, amplitude 1.5 mm p-p according to IEC 60068-2-6

Climate resistance: Damp heat, 21 days according to IEC 60512-11

CERTIFICATE

Conformities: CE, 2011 / 65 / EC (RoHS), 2014 / 35 / EU (LVD)

REACH: REACH compliant

RoHS: RoHS compliant

OTHER

Short Description: Push button, Ø 22 mm, stainless steel 316L, cable 200 mm, 180°, Maintained, 35 V AC/DC @ 0,6 A, Cable 200 mm, 180°, Round, Stainless steel 316L, Silver

Housing size: 19 mm

Hints: Cable with certification ECE-R118

Wiring diagrams:

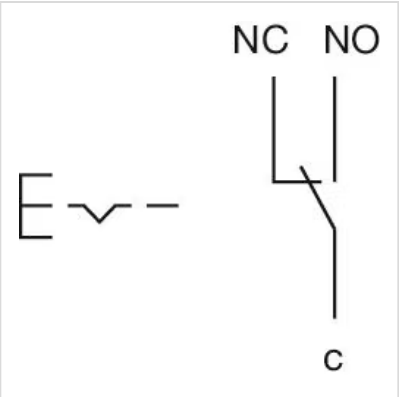

Component layouts:

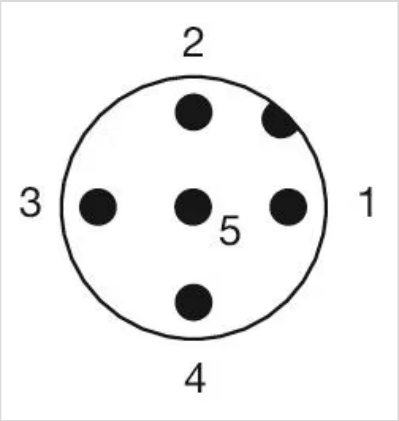

1 = NC
2 = LED+
3 = Common
4 = LED-
5 = NO
A-Coded

Mounting cut-outs:

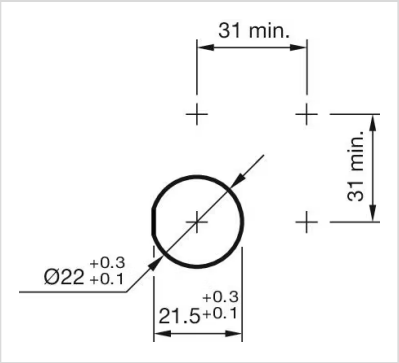
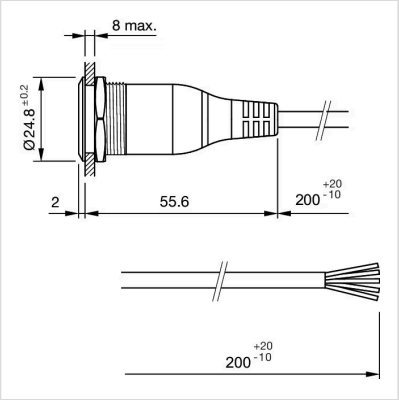
Dimension drawings: