Your Expert Partner for **Human Machine Interfaces**

Actuator

71-
631.0/D

https://www.eao.com/component/71-631.0/D/en/a...

Your product:

71-631.0/D
Actuator

MOUNTING

Mounting type: Panel mounting

ELECTRICAL CHARACTERISTICS

Switching voltage and switching current:

Switch rating AC cosφ 0,7 … 0,8		
gemäss EN IEC 60947-5-1		
Voltage	250 VAC	
Current	3 A	
Switch rating DC		
gemäss EN IEC 60947-5-1		
Voltage	24 VDC	250 VDC
Current	3 A	0.5 A

Surge voltage resistance: 2500 VAC, 50 Hz, 1 minute, as per DIN / IEC 60512-2 between all terminals and earth

Recommended minimum operational data:

Voltage	5 VAC/DC
Current	10 mA

MECHANICAL CHARACTERISTICS

Switching action: Momentary - Rest (a) - Momentary

Switching system: Self-cleaning, double-break snap action switching system, 1 normally closed and 1 normally open contact per element.

Switching positions: 3 positions

Switching angle: 42° left / 42° right

Mechanical lifetime: 50 000 cycles of operation

Tightening torque: Fixing nut max. 0.5 Nm

Weight: 0.026 kg

AMBIENT CONDITION

IP Protection: IP65 front side

Operating temperature:	– 25 °C ... + 55 °C
Storage temperature:	– 40 °C ... + 85 °C
Shock resistance:	Max. 500 m/s^2, pulse width, 3-axis (sinusoidal EN IEC 60068-2-27)
Vibration resistance:	Max. 100 m / s^2 from 10 Hz ... 500 Hz, (sinusoidal EN IEC 60068-2-6)
Climate resistance:	Damp heat, steady: 56 days, + 40 °C/93 % relative humidity, according to EN IEC 60068-2-78

CERTIFICATE

Conformities:	CE, UKCA, 2011 / 65 / EC (RoHS), 2014 / 35 / EU (LVD)
REACH:	REACH compliant
RoHS:	RoHS compliant

OTHER

Short Description:	Actuator, Momentary - Rest (a) - Momentary
Housing material:	Plastic, according to UL 94 V0
Product attributes:	Standard lock: DOM 311
Hints:	Standard lock: DOM 311

Switching positions:

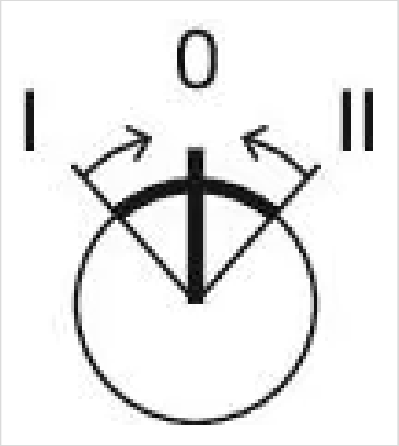

Wiring diagrams:

Mounting cut-outs:

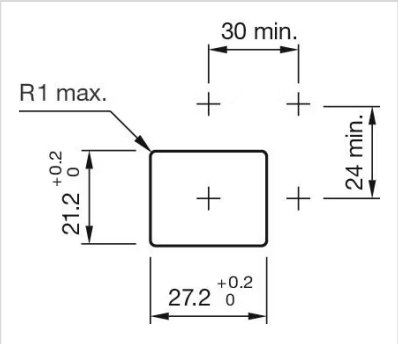

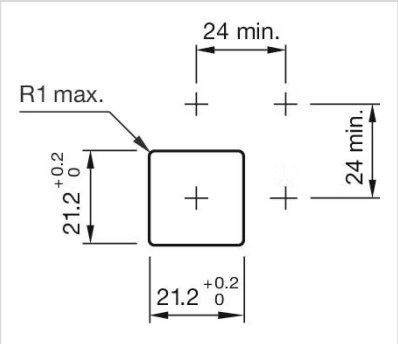

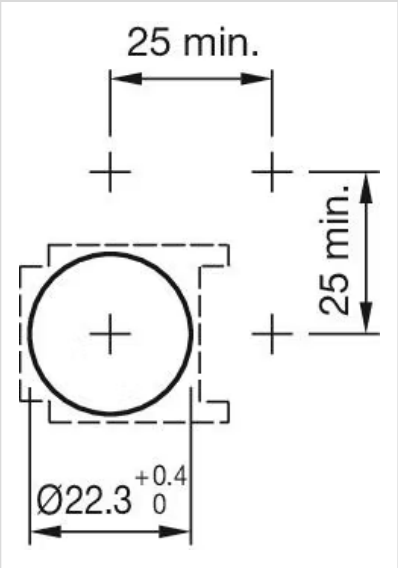

Dimension drawings:

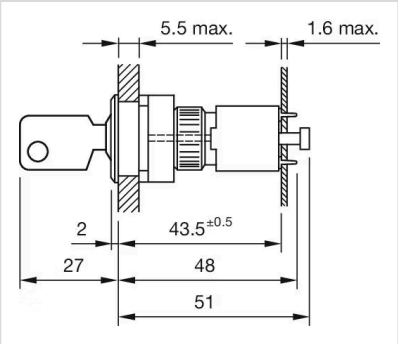
5.5 max.
1.6 max.
2
43.5±0.5
27
48
51

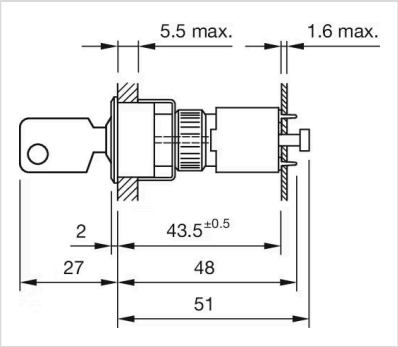
5.5 max.
1.6 max.
2
43.5±0.5
27
48
51