Your Expert Partner for **Human Machine Interfaces**

Stop switch

84-6220.0020

https://www.eao.com/component/84-6220.0020/en...

Your product:

84-6220.0020
Stop switch

FRONT

Front dimension:	Ø 32 mm
Front form:	Round

MOUNTING

Mounting cut-out:	Ø 22.3 mm
Mounting type:	Panel mounting

OPERATING-/INDICATION PART

Lens colour:	Grey
Lens material:	Plastic
Lens illumination:	Non illuminated
Lens shape:	Mushroom-head
Lens optics:	opaque
Lens:	round
Switching position ring:	Black
Illumination colour:	none

ELECTRICAL CHARACTERISTICS

Switching voltage and switching current:

Switch rating AC with silver contact (gold plated)		
Service category AC-15 as per EN IEC 60947-5-1		
Voltage	120 VAC	240 VAC
Current	3 A	1,5 A
Switch rating AC with silver contact (gold plated)		
Service category DC-13 as per EN IEC 60947-5-1		
NO contacts	NC contacts	NO/NC contacts
(48 VA)	(60 VA)	
12 VDC/2.0 A	12 VDC/2.5 A	125 VDC/0.22 A
24 VDC/2.0 A	24 VDC/2.5 A	250 VDC/0.11 A
48 VDC/1.0 A	48 VDC/1.25 A	
60 VDC/0.8 A	60 VDC/1.0 A	

Contacts: 1 NC

Rated Operational Voltage Ue: 250 VAC/DC according to EN IEC 60947-1

Rated impulse withstand voltage Uimp: 4 kV, according to EN IEC 60947-1

Rated insulation voltage Ui: 250 V according to EN / IEC 60947-1

Rated short-circuit current caused: 1 000 A, type of short-circuit device 6 A gG (EN 60947-5-1)

Recommended minimum operational data:

Silver contacts (gold plated)	
Voltage	1 VAC/DC
Current	1 mA

Switching rating: 250 V AC @ 1,5 A

Electrical lifetime: 50 000 cycles of operation

Electric strength: 500 VAC, 50 Hz, 1 minute according to DIN IEC 60512-2

Overvoltage category: III, according to EN / IEC 61058-1

Pollution degree: 3, according to EN IEC 60947-1

Protection class: II, according to EN / IEC 60947-5

Standards: According to EN 60947-5-1, EN 60947-5-5, DIN EN ISO 13850, EN IEC 60204

Thermal current Ith: 5 A

MECHANICAL CHARACTERISTICS

Terminal: Plug-in terminal, 2.8 x 0.5 mm

Contact material: Gold

Switching action: Maintained

Switching system: Slow-make switching element

Release type: Twist to unlock

Mechanical lifetime: ≥50 000 cycles of operation

Operating force: 20 N ±4 N

Operating Travel: ca. 4 mm

Tightening torque:	Fixing nut 0.8 Nm
Weight:	0.024 kg

AMBIENT CONDITION

IP front protection:	IP65, IP66, IP67, according to DIN EN 60529
IK Protection:	IK07 as per IEC 62262
Operating temperature:	– 25 °C ... + 70 °C
Storage temperature:	– 25 °C ... + 85 °C
Shock resistance:	Max. 150 m / s^2, pulse width 11 ms, 3-axis, (semi-sinusoidal as per EN IEC 60068-2-27)
Vibration resistance:	Max. 50 m / s^2 from 10 Hz ... 500 Hz, 10 cycles, 3-axis (sinusoidal EN IEC 60068-2-6)
Climate resistance:	Damp heat, cyclic: 96 hours, + 25 °C/97 %, + 55 °C/93 % relative humidity, as per EN IEC 60068-2-30 Damp heat, steady: 56 days, + 40 °C/93 % relative humidity, according to EN IEC 60068-2-78 Saline mist: 96 hours, + 35 °C in chemical solution NaCl, as per EN IEC 60068-2-11 Dry heat: 96 hours, + 70 °C, as per EN IEC 60068-2-2 Low temperature: 96 hours, – 40 °C (as per EN IEC 60068-2-1) Simulated solar radiation test SA2 and weathering test SB1 as per EN IEC 60068-2-5

CERTIFICATE

Approbations:	CB (IEC 60947-5-1. IEC60947-5-5), CCC, UL NKCR
Conformities:	CE, UKCA, 2006 / 42 / EC (MD), 2011 / 65 / EC (RoHS)
REACH:	REACH compliant
RoHS:	RoHS compliant

OTHER

Short Description:	Stop switch, Ø 22.3 mm, Ø 32 mm, Mushroom-head, Non illuminated, Grey, Plastic, opaque, Round, 1 NC, Maintained, Plug-in terminal, 2.8 x 0.5 mm, IP65, IP66, IP67, according to DIN EN 60529, Twist to unlock, none
Material:	Plastic, according to UL 94 V0
Housing colour:	Grey
Housing material:	Plastic, according to UL 94 V0
Product attributes:	Twist to unlock clockwise
Hints:	Position indication ring black Twist to unlock clockwise
Description component:	

The double-break switching system can be supplied for the following switching functions: 1 Normally closed, 2 Normally closed, 1 Normally closed + 1 Normally open. The Normally closed contacts have forced opening according to EN 60947-5-5,Material housing actuator: Plastic as per UL94 V0,Material lens: Plastic as per UL94 V2

Wiring diagrams:

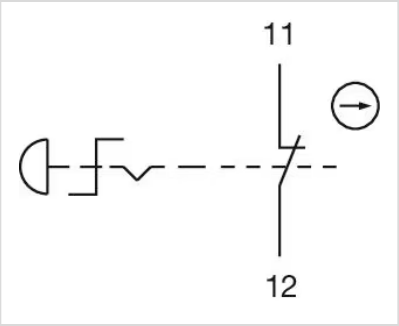

Component layouts:

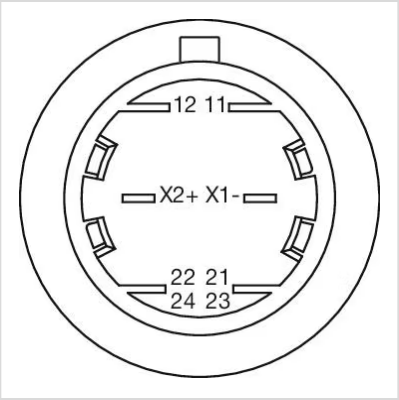

Mounting cut-outs:

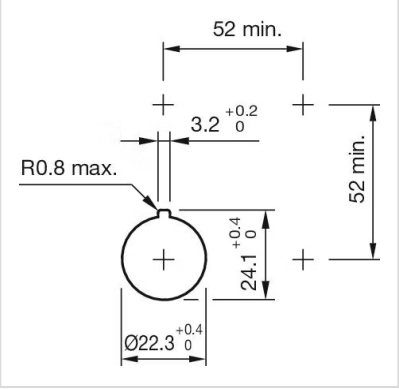

Dimension drawings:

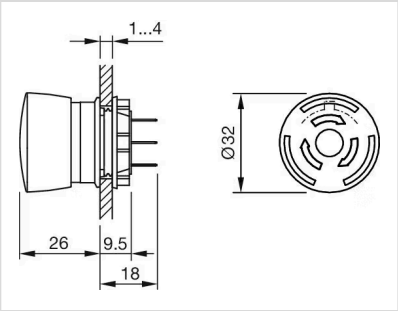
1...4
Ø32
26
9.5
18